2 Technical data

Contents

2.1 Identification data 3
2.2 Machine type designation 3
2.3 Directed use 4
2.4 Ambience 4
2.5 Electrical connections 4
2.6 Dimension / Weight 5
2.7 Driving unit / Hydraulics 6
2.8 Closing unit 7
2.9 Shot unit 8
2.10 Production data 9
2.11 p/Q^2-Diagram 9
2.12 Noise level of the DCM 10
2.13 Peripheral units 11
2.14 Enclosures 11

© Copyright 1999 Bühler Druckguss AG, CH-9240 Uzwil

Software

Page Maker 6.5

© Copyright 1999 Bühler Druckguss AG, CH-9240 Uzwil

2.1 Identification data

Customer
Honda of South Carolina
1111 Honda Way
29161 Timmonsville

Maschine-Type:
Evolution 105 DL

Year of construction:
2001

Order Number:
574 907

Maschine-Number:
10 335 790

2.2 Machine type designation

Maschine-serial

***EVOLUTION* 105 DL**

Type of closing unit

Type of injection unit

© Copyright 1999 Bühler Druckguss AG, CH-9240 Uzwil

2.3 Directed use

Buhler horizontal die-casting machines are designed exclusively for the pressure die-casting of aluminium, magnesium, zinc and copper alloys. Any use beyond this scope is regarded as non-directed.

The manufacturer can **not** be made liable for any damages that are a result of non-directed use. The user is the sole bearer of the risk for such damage

The observance of the conditions for installation, start-up, operation and maintenance as instructed by the manufacturer are inherent with the directed use.

2.4 Ambience

In order to determine a suitable location for the DCM or DCI a number of important aspects will have to be taken into account.

See chapter „Preparing the site of installation“.

2.5 Electrical connections

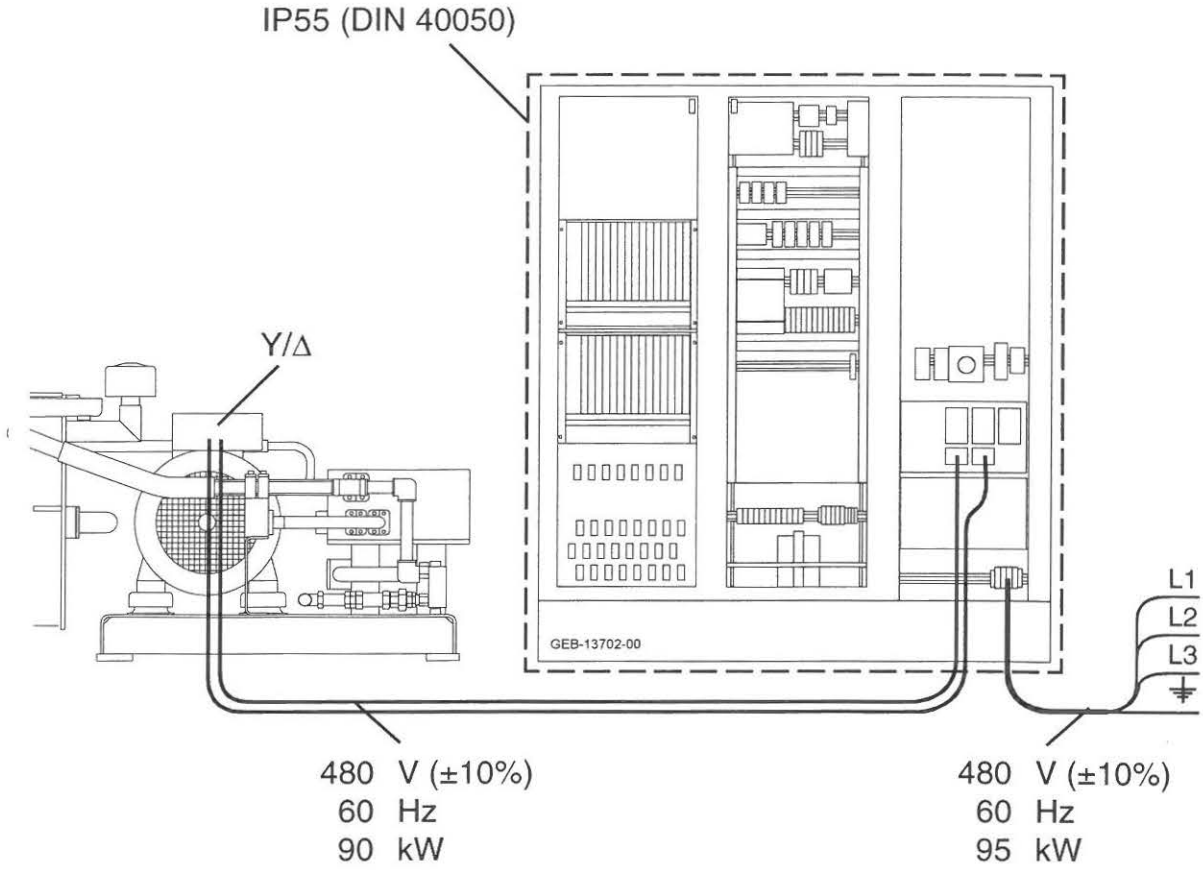

© Copyright 1999 Bühler Druckguss AG, CH-9240 Uzwil

2.6 Dimension / Weight

Machine ready for production:..... 55'000 kg

Weight of the control cabinet:..... 464 kg

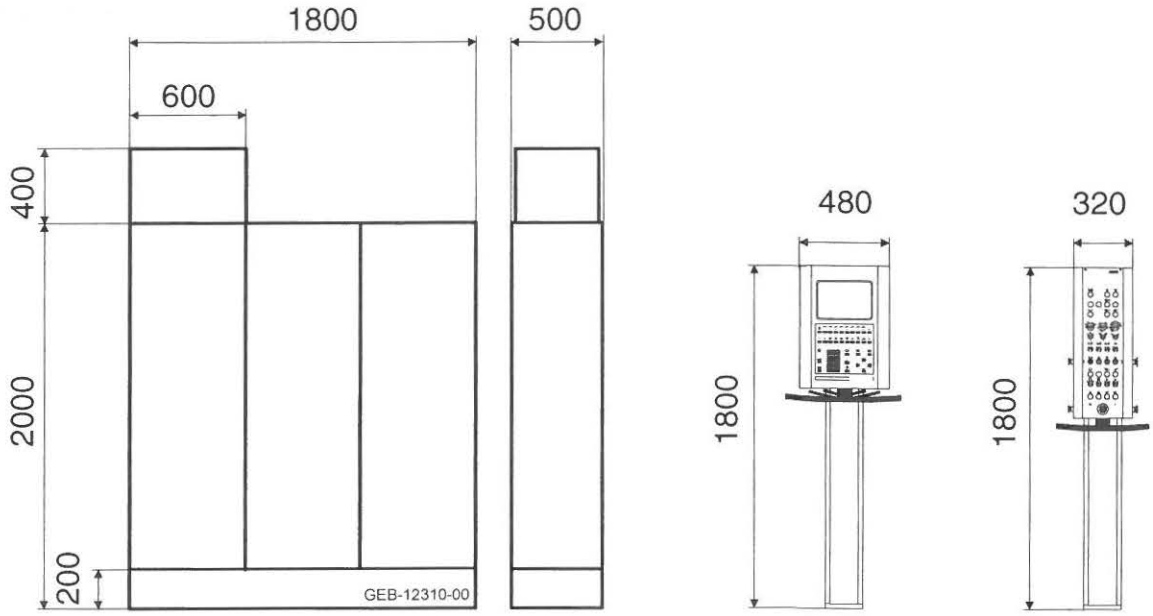

© Copyright 1999 Bühler Druckguss AG, CH-9240 Uzwil

2.7 Driving unit / Hydraulics

MAIN MOTOR M1

Installed load:..... 90 kW

Number of revolutions:..... 1780 U/min

HYDRAULIC TANK 507.21 gallons

Filling quantity: ..... 1920 dm³

SUCTION FILTER

Transmittance:..... 200 µ

VARIABLE DISPLACEMENT PUMP

Displacement:.... 175 l/min

FIXED DISPLACEMENT PUMP

Displacement: .... 219 l/min

PARTIAL FLOW PUMP

Displacement:··· 113 l/min

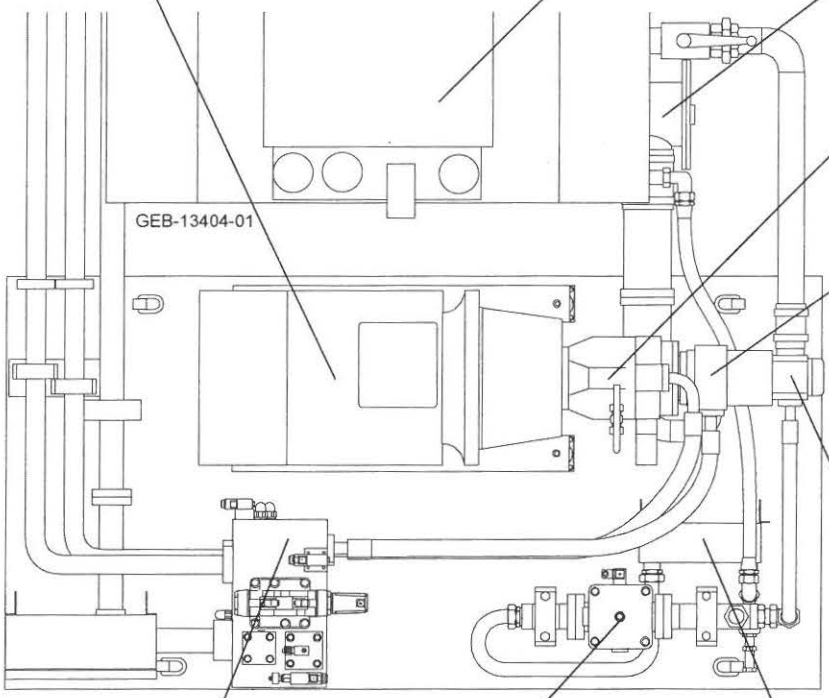

LOW PRESSURE FILTER

Transmittance:..... 10 µ

PUMP/CLOSING HYDRAULICS

Max. operating pressure:..... 210 bar

Optimum operating temperature:.... 43 °C

HEAT EXCHANGER

Operating pressure:..... 3 - 10 bar

Water temperature supply line:..... 5 - 30 °C

Water consumption*:..... 3.5 m³/h

© Copyright 1999 Bühler Druckguss AG, CH-9240 Uzwil

2.8 Closing unit

CENTRAL LUBRICATION

Filling quantity: ..... 15 dm^3

DIE

Die height: ..... 610 - 1170 mm
Die opening stroke: ..... 740 mm
Max. permissible surface pressure: ..... 100 N
Min. permissible die dimensions: .. 800 x 800 mm

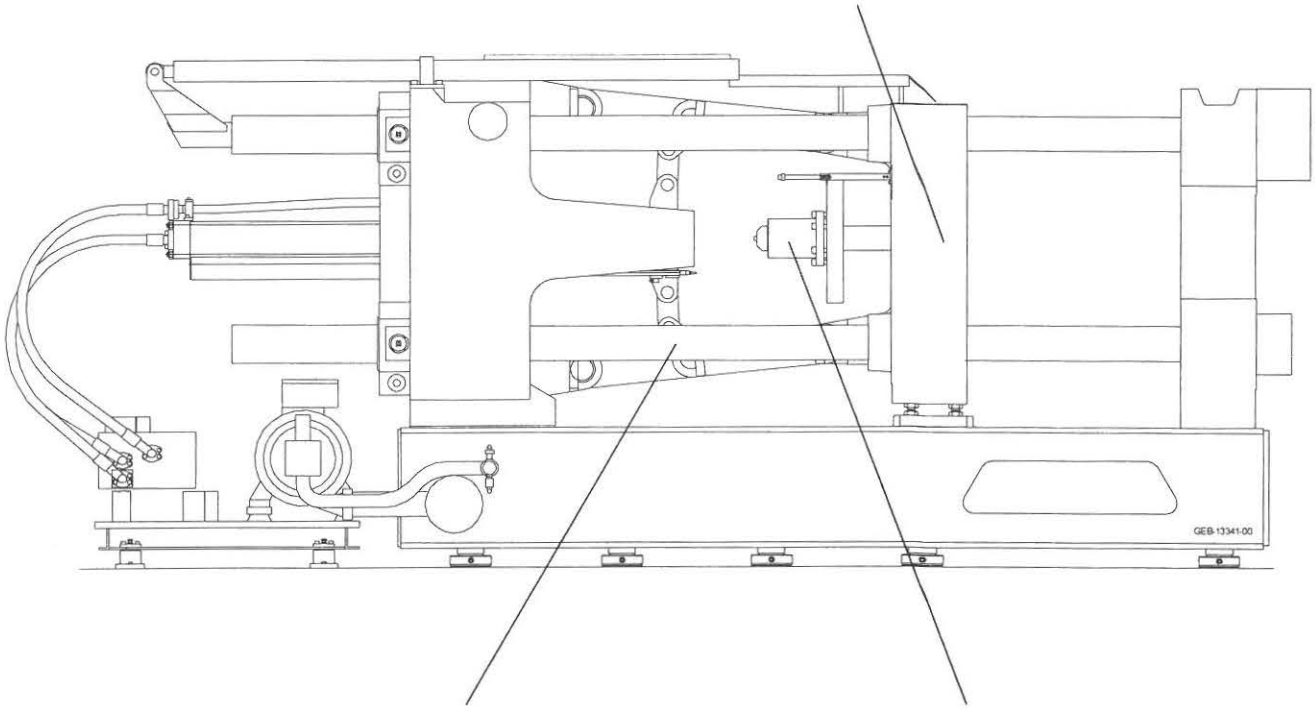

TIE BARS

Tie bar spacing: ..... 1118 x 1118 mm
Tie bar diameter: ..... 200 mm
Tie bar pulling from 0-Linie: ..... 7638 mm
Tie bar removal from 0-Linie: ..... 9030 mm

EJECTOR

Ejector stroke: ..... 220 mm
Ejector force: ..... 400 kN

LOCKING FORCE

Max. locking force: ..... 10500 kN

© Copyright 1999 Bühler Druckguss AG, CH-9240 Uzwil

2.9 Shot unit

NITROGEN SYSTEM INTENSIFIER

Filling quantity: ..... 65 dm^3
Max. idle pressure: ..... 160 bar
Area ratio: ..... 1 : 2,44
Stroke: ..... 170 mm

NITROGEN SYSTEM ACCUMULATOR

Filling quantity: ..... 195 dm^3
Max. idle pressure: ..... 160 bar
Max. pressure accumulator charged: ..... 200 bar

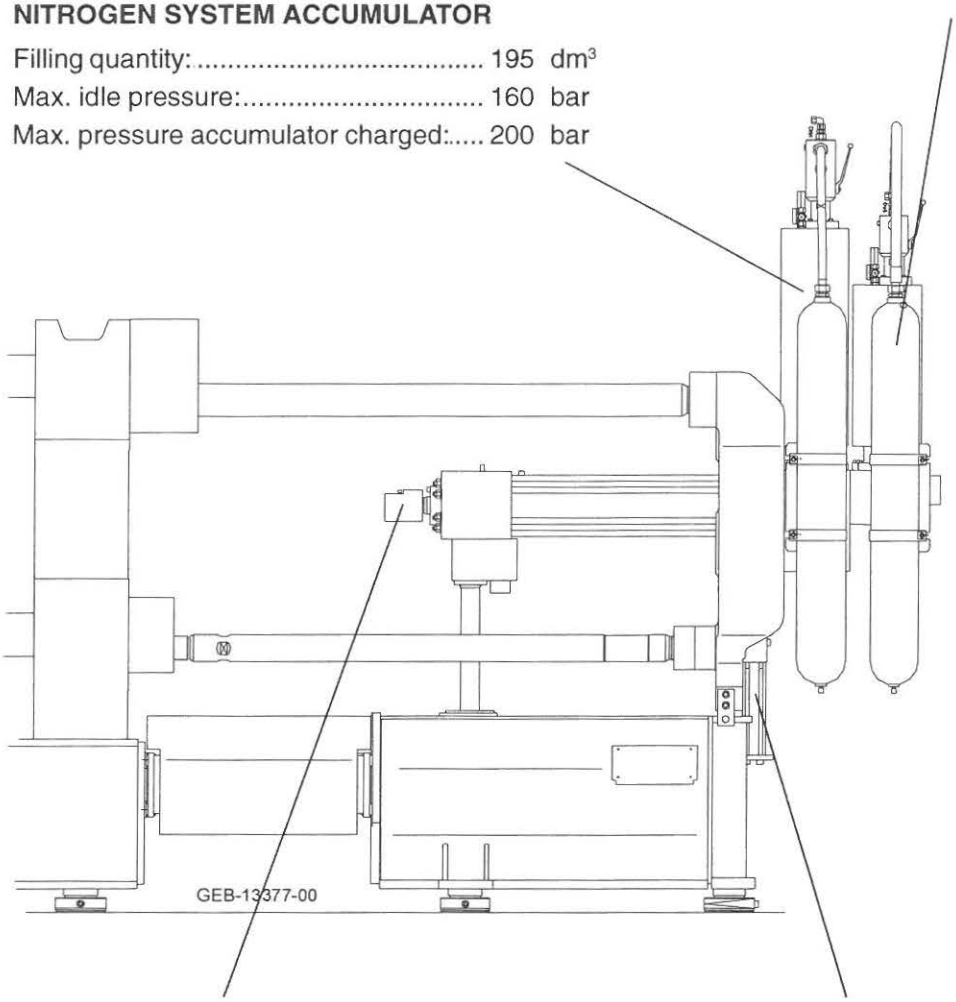

PLUNGER

Injection force dynamic: ..... 398 kN
Injection force intensified: ..... 1096 kN
Plunger stroke: ..... 900 mm
Plunger diameter: ..... 3.25 - 5 inch

CASTING POSITION ADJUSTMENT

Casting positions: ..... 0 / - 350 mm

PLUNGER LUBRICATION

Filling quantity: ..... 10 dm^3

© Copyright 1999 Bühler Druckguss AG, CH-9240 Uzwil

2.10 Production data

Pluger Diameter	inch	3.25	3.5	4	4.5	5
Maximum Casting Volume	cu in	196	227	297	375	463
Maximum Casting Weight Al	lb	17.62	20.44	26.69	33.78	41.70
Maximum Metal Pressure	psi	29701	25610	19607	15492	12549
Maximum Projected Area	sq in	79	92	120	152	188

SC D/105

The maximum casting weight is calculated according to (DIN 22480):

$^2/_3$ x Plunger Stroke x Plunger Surface x Density (Al 2,5 kg/dm^3)

2.11 p/Q^2-Diagram

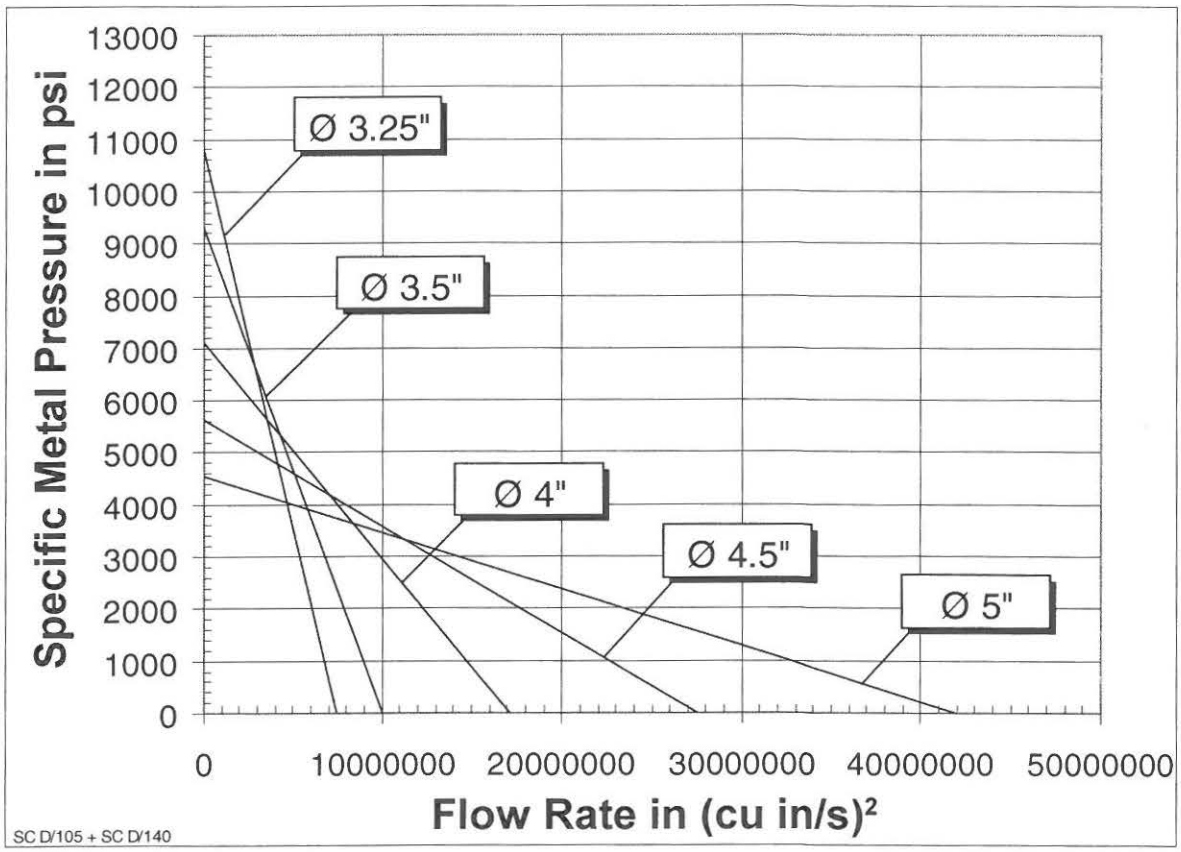

© Copyright 1999 Bühler Druckguss AG, CH-9240 Uzwil

2.12 Noise level of the DCM

Sound

Sources:

- the drive unit.
- during the casting process.

Depends on: machine load during operation.

Regulations: observe the local regulations.

WARNING!
If the noise emission is higher than the permissible values the personnel must wear appropriate ear protectors!

Measuring setup

- Casting process without metal (plastic plug). When casting with metal smaller pulse coefficients DLI eq (ca. 3dB) must be expected.
- Data are related exclusively to the DCM (without peripheral units).
- Measurements carried out according to DIN 45635 Section 1.
- Variations from the given values Leq and DLI eq are contingent to the operating conditions tCyc, vl and vl Br.

Results

Leq	A-rating equivalent continuous sound level pressure at the working place including the pulse coefficient	79	dB(A)
DLI eq	pulse coefficient	5	dB

Operating conditions

tCyc	cycling time	30	s
vl	plunger speed	5.0	m/s
vl Br	braking velocity	1.0	m/s

© Copyright 1999 Bühler Druckguss AG, CH-9240 Uzwil

2.13 Peripheral units

Please take the technical details of peripheral units from the relevant instruction manuals.

2.14 Enclosures

Checklist

Dimension sheets: Die-casting machine

Platens

Shot unit

© Copyright 1999 Bühler Druckguss AG, CH-9240 Uzwil

© Copyright 1999 Bühler Druckguss AG, CH-9240 Uzwil

Check list technical data / operating materials

Check the following points according to check list: OK = ✔

- The required amount of hydraulic fluid is available ☐
- The required lubricant for the central lubricating system is available ☐
- The required plunger lubricant is available ☐
- The required nitrogen is available ☐
- Lubricating grease for the die-casting machine is available ☐
- Lubricating grease for the electric motors is available ☐

Notes

Date: ..... Signature: .....

 © Bühler AG

Preface

Bühler Druckguss AG reserves all rights to this document and to the object thereof. Without the prior written permission of the Bühler Druckguss AG this document may not, either in whole or in part, be reproduced, copied, or, in any form, in whole or in part, made accessible to a third party, or be used for any purpose other than that for which it was made available to the recipient.

These Operating Instructions include basic information on the design and operating principle, the installation, startup, operation and maintenance of the machine and control unit.

It is assumed that the operators are qualified and trained. For this reason, such descriptions as do not require any special knowledge have been omitted. Instructions for repairs that go beyond the normal maintenance and servicing, are not described here.

This machine is built in compliance with the recognised safety engineering principles. In spite of this, inexpert use may entail hazards to the health and life of persons, or may cause damage to property.

CAUTION !

Do not set the machine into operation before you have read and understood the entire instruction manual, in particular Chapter „Safety"!

Non-compliance with the Operating Instructions will result in the lapse of warranty; this also applies to alterations or repairs to the machine without permission in writing from Bühler Druckguss AGin advance. Damage which is the result of inexpert handling, disregard of our instructions, or operating errors made by untrained personnel, can never in any circumstances be charged to the manufacturer.

Bühler Druckguss AG is only liable for direct person injury and direct property damage based on the applicable product liability law if the machine is used within the area specified in these Operating Instructions, or in a contractually agreed application. Bühler Druckguss AG is not obliged to reimburse damage which is not direct result of the machine itself (exploitation losses, production downtime and profit drop as well as other direct and indirect damage).

Bühler Druckguss AG, Uzwil/Schweiz

CE

© Copyright 1999 Bühler Druckguss AG, CH-9240 Uzwil

Software

Page Maker 6.5

© Copyright 1999 Bühler Druckguss AG, CH-9240 Uzwil

0.1 Content of the machine documentation

Manual 1: Operating instructions

- safety
- technical data
- preparing the site of installation
- energy connections
- operating materials
- transport
- erecting and starting up

Manual 2: Operating instructions

- design and method of function
- operating / programming
- setting
- maintenance
- diagnosis / elimination of faults
- hydrailc diagrams
- spare parts
- customer specific accessories

Manual 3: Electrical diagrams

- electrical diagrams
- description of interfaces
- spare parts for the control system
- adjustment instructions

Certificates

- certificates for:
  - accumulators
  - pressure vessels
  - safety valves

© Copyright 1999 Bühler Druckguss AG, CH-9240 Uzwil

0.2 Designation of the machine sides

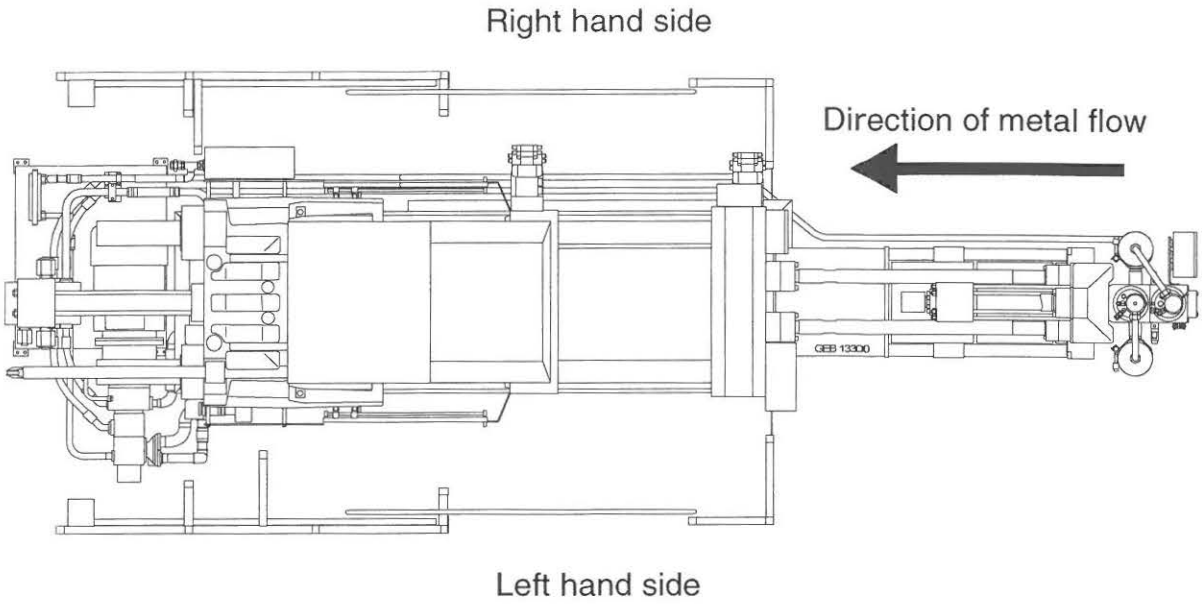

0.3 Abbreviations

Following abbreviations are used in the operating manuals and on the screen:

- DCM = Die-casting machine
- DCI = Die-casting installation
- MMI = Man Machine Interface

© Copyright 1999 Bühler Druckguss AG, CH-9240 Uzwil

1 Safety

Contents

1.1 General ... 3
1.1.1 Duty of Instruction ... 3
1.2 Symbol for safety of labour ... 4
1.3 Directed use ... 4
1.4 Directions on protection of labour ... 5
1.4.1 General ... 5
1.4.2 Safety for operator and machine setter ... 6
1.4.3 Protective clothing for the personnel ... 6
1.4.4 Hazardous areas ... 6
1.4.5 Protective devices ... 7
1.4.6 Fencing ... 7
1.4.7 Instructions for transport ... 8
1.4.8 Machine Erection ... 8
1.4.9 Electrical Equipment ... 8
1.4.10 Machine Initial Startup ... 9
1.4.11 Machine Operation ... 9
1.4.12 Avoidance of accidents by careful maintenance ... 10
1.4.13 Mechanical maintenance ... 11
1.4.14 Electrical maintenance ... 12
1.5 Safety Concept for Control Systems of Machines ... 13
1.5.1 Control software ... 13
1.5.2 Data safeguarding ... 13
1.5.3 Viruses ... 14

© Copyright 1999 Bühler Druckguss AG, CH-9240 Uzwil

1.6 Emissions 15
1.6.1 Noise 15
1.6.2 Emission of vapours and smoke 15
1.6.3 Liquids that are detrimental to health and the environment. ... 16
1.6.4 Service water 16
1.7 Country Specific Standards 17

© Copyright 1999 Bühler Druckguss AG, CH-9240 Uzwil

1.1 General

These operating instructions must always be kept close to the machine.

1.1.1 Duty of Instruction

The user is responsible for training and safety of operating personnel. Thus, it is very important that the documentation is actually handed over to these persons.

The machine user and operating personnel are obliged to note and to observe the instructions in these operating instructions.

The user is responsible for instructing the personnel as to the fire prevention measures and adhering to the relevant rules and regulations.

The user of the machine is obliged to observe the following regulations in order to obtain the highest possible standard of safety for the operating personnel at the machines.

The machine should only be operated by persons who have been instructed and are aware of the dangers involved.

Every person the in the company of the user who is concerned with the installation, setting into operation, machine setting and die changing, operating and maintenance (inspection, maintenance, repairing) of the DCM or DCI must have read and understood the complete instruction manual and in particular Chapter „Safety".

If personnel are employed who are not able to read, the owner of the machine must carefully point out all possible dangers to them and instruct them specially.

The competences of the personnel regarding operation, machine setting and die changing, programming and servicing of machine and control system must be clearly defined and adhered to, so as to avoid any confusion of responsibilities related to the aspect of safety.

The user must make sure that his personnel is able to operate, set and service the machine and knows the safety instructions.

The user is recommended to have this confirmed in writing by his personnel.

It is recommended to consult Bühler personnel for instruction purpose.

Note

By "user" is understood whoever uses the machine for economic reasons. The user is not identical with the person who operates the machine.

© Copyright 1999 Bühler Druckguss AG, CH-9240 Uzwil

1.2 Symbol for safety of labour

This symbol will be found near all references concerning safety of labour in this instruction manual and in connection with the relevant titles and can mean

- **"DANGER!"** immediate danger to life and limb
- **"WARNING!"** possible danger of injury or life
- **"CAUTION!"** possible danger of injury, damage.

Take notice of these references and act with necessary care in these cases. Pass on all instructions for safety of labour also to users. Besides the references in this manual also the local regulations for safety and accident prevention must be observed.

1.3 Directed use

Buhler horizontal die-casting machines are designed exclusively for the pressure die-casting of aluminium, magnesium, zinc and copper alloys. **Any use beyond this scope is regarded as non-directed**.

The manufacturer can **not** be made liable for any damages that are a result of non-directed use. The user is the sole bearer of the risk for such damage

The observance of the conditions for installation, start-up, operation and maintenance as instructed by the manufacturer are inherent with the directed use.

© Copyright 1999 Bühler Druckguss AG, CH-9240 Uzwil

1.4 Directions on protection of labour

1.4.1 General

The machine should be operated only if it is in the faultless operational condition, and used conscious of safety and hazards and in accordance with the intended purpose. In addition, these operating instructions must be observed.

The machine is built in keeping with the latest technological developments and in accordance with current standards of safety of labour and operation. However, there are dangers connected with these machines if they are not appropriately used by untrained personnel or if they are not used as directed.

The machine is equipped ex factory with safety devices. As long as the machine is used for its intended purpose these precautions conform to the current international state-of-the-art as well as the accident prevention regulations generally in effect.

These operating instructions include the safety rules for preventing accidents. In addition, all generally valid local safety instructions and safety rules do always apply.

For all activities concerning setting into operation, operating, machine setting and servicing of the DCM or DCI the switching off procedures described in the operating manuals must be observed.

All activities in connection with setting, repairing and servicing of DCM or DCI must be carried out exclusively with the DCM or DCI switched off and while it is at standstill.

Every method of working by which safety at the DCM or DCI is impaired is forbidden.

Wilful modifications and changes which impair safe operation of the DCM or DCI are not allowed.

Safety and protective devices must be kept in perfect working condition under all conditions. The removal, making ineffective or putting out of order of these devices is strictly forbidden.

Before starting up after repairing or maintenance work always make sure that all safety devices have been installed.

If malfunction occurs, immediately identify and eliminate the cause.

By all means observe notices and danger signs, keep these clean, do not remove or cover them.

© Copyright 1999 Bühler Druckguss AG, CH-9240 Uzwil

1.4.2 Safety for operator and machine setter

The operator and machine setter are jointly responsible for not letting persons work on the DCM or DCI who are not qualified to do so.

The operator and machine setter are obliged to immediately notify any changes which impair the safety of the DCM or DCI.

The operator and machine setter are obliged to wear clothing as prescribed (see Paragraph "Protective clothing for personnel").

It is strictly forbidden for any persons to be within the hazardous area while at the same time a person is operating the DCM or DCI at the operating unit.

During machine setting the metal ladling unit must be switched off and secured.

During machine setting with the cover of the casting cylinder open, never stand on the piston rod of the casting cylinder. Danger of squashing!

1.4.3 Protective clothing for the personnel

The personnel should wear eye protectors, gloves, headgear, good shoes and outerwear of robust material that is resistant to high temperatures.

Inappropriate or wrong clothing can be a cause for burning.

Observe the local regulations.

1.4.4 Hazardous areas

The operating instructions refer to special dangerous areas. These areas of the machine are marked by using warning signs.

The hazardous areas are explained under Chapter "Preparing the site of installation" and are briefly described hereafter

The moving elements of the DCM

- Toggle system: squashing and shearing points
- Die area: squashing points, high temperatures, metal spray
- Injection unit: squashing points and possibly metal spray

The peripheral units

(see the instruction manuals of the peripheral units)

- Spraying unit
- Extractor

© Copyright 1999 Bühler Druckguss AG, CH-9240 Uzwil

- Metal ladling unit
- Trimming press, etc.

Accessing the die area is allowed only when the machine, spraying unit and extractor are switched off and secured.

Safety-gate area when program selected "with/without safety gate"

- Program selection **"with/without safety gate"** is an **extremely dangerous** condition. The user is therefore, **under the obligation** to fence in the safety gate area (see chapter "Errection/Setting into operation", paragraph "Fencing").
- In addition to the fencing, also **a splash plate, e.g. of steel plate, must be mounted against metal spray from the die**.

1.4.5 Protective devices

In order to protect the personnel against hazards as described under Paragraph "Hazardous areas"

- **the DCM is equipped with shields, covers, protection grids, safety gates operator anti-trap device etc. (see Chapter "Design and method of function").**
- every peripheral unit is fitted with the necessary protective devices (see instruction manuals of the peripherals).
- **the DCI should be safeguarded by a fencing (see paragraph "Fencing").**
- the user is responsible, to provide a protective device in the shot sleeve area against possibly metal spray.

1.4.6 Fencing

Fences are protective devices which surround the hazardous area in such a manner, that these alone, or in connection with other parts, inhibit access to the hazardous areas from outside.

Surmounting or passing through the fencing without aids must not be possible.

Access to the safeguarded area must be exclusively via doors. The doors are interlocked with the control system of the installation in such a manner, that access to the hazardous areas is possible only in non-hazardous condition.

For example of a DCM or DCI fencing see Chapter "Preparing the site of installation".

© Copyright 1999 Bühler Druckguss AG, CH-9240 Uzwil